AliDeck

FURNITURE TIE DOWN ANCHOR

Specification Datasheet

A stainless steel folding D-ring, able to be installed between AliDeck decking boards to allow furniture to be tied down. Maximum loading of 85KG confirmed in testing.

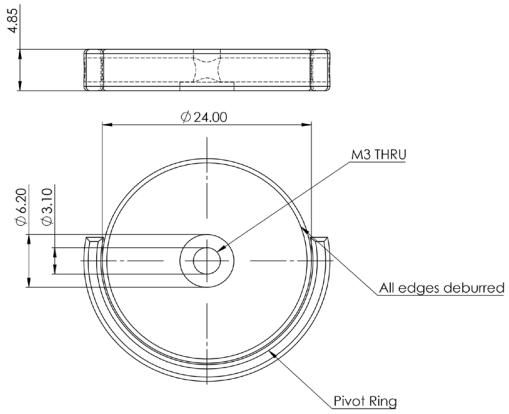

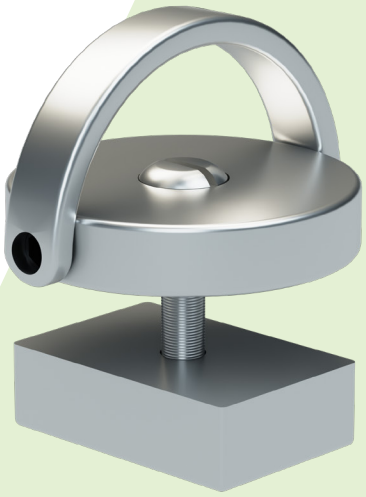

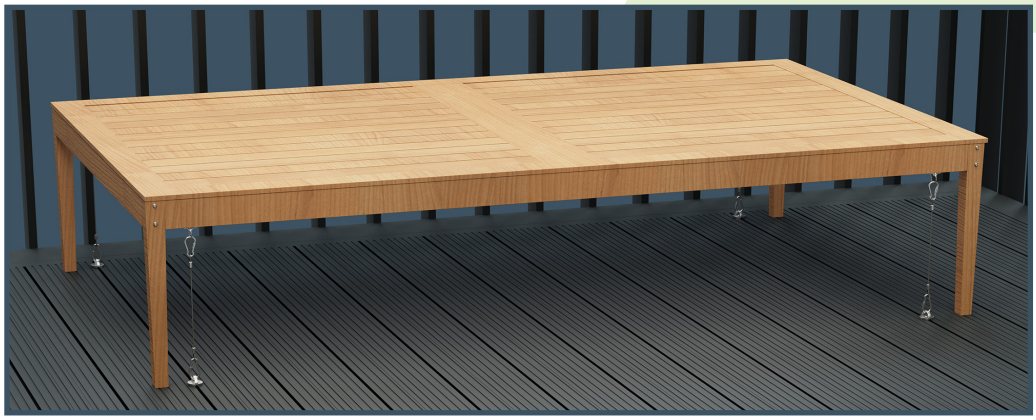

Usage Notes

Lashing material is not supplied.

We recommend the following:

- Heavy-Duty Stainless Steel Cable
- Minimum 4mm overall diameter
- Fitted with tamper-resistant stainless steel snap hook

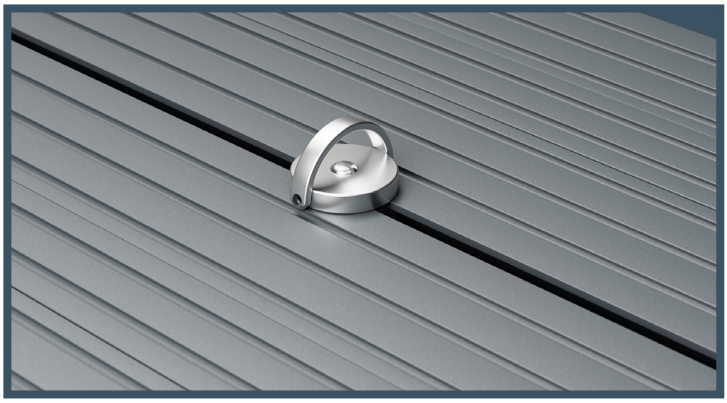

Unit 27
Rochester Airport Industrial Estate
Laker Road, Rochester
Kent ME1 3QX

Tel: **01622 235 672**
Email: **info@alideck.co.uk**
www.alideck.co.uk

ALIDECK™
Aluminium Decking