(Alideck) - (Lite Balcony Board - Standard Drawing)

Lite Balcony Board

Maximum span between fixings: 400mm
Length of extrusion stock: 6m & 4m
Can be joined

SCALE 1:1

Lite Balcony Board Clip

Maximum length: 6000mm
Can be joined

SCALE 1:1

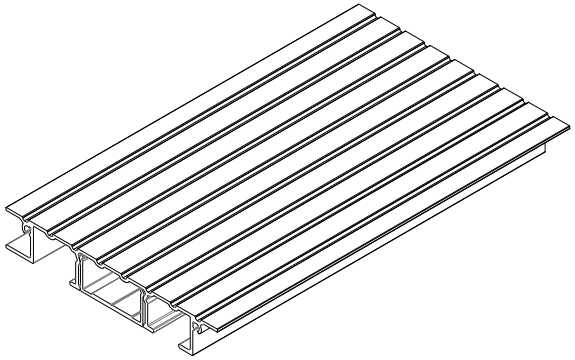

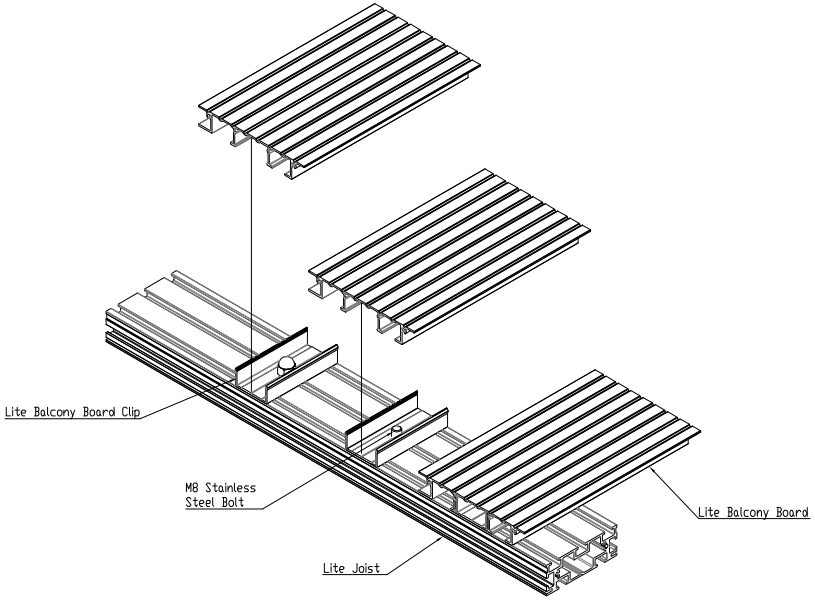

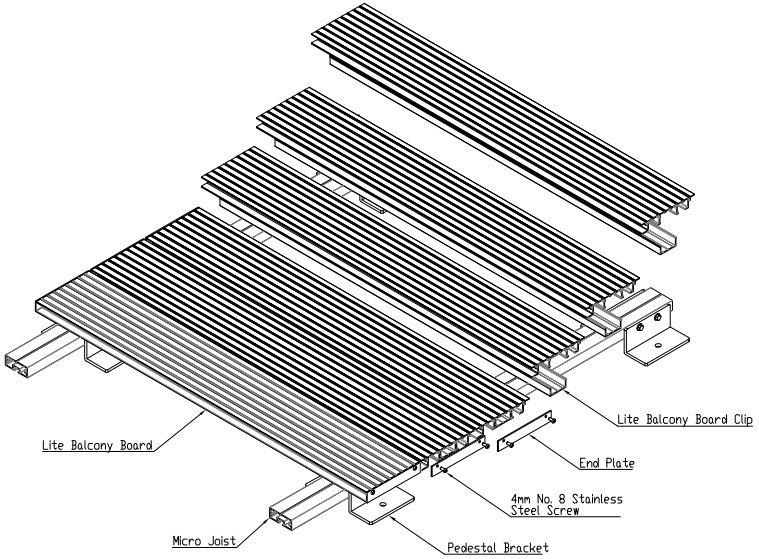

ISOMETRIC VIEW

Board Span (Center to Center of Joists) - 400mm

Colour : 10 Standard Colours

ALIDECK
Aluminium Decking

From

This drawing and the product it displays is the sole property of The Mawood Group & Alideck . any reproduction of this drawing or product without the written permission of The Mawood Group & Alideck is prohibited.

MAWOOD GROUP

Drawing Title:
(Alideck) - (Lite Balcony Board - Standard Drawing)

Product:
Lite Balcony Board

Date	Page Size	Scale	Drawn
20-08-21	A2 (L)	1:3	Shyam
Issuer	Sequence	(Tol)	Rev
MIL	000001	+/- 1mm	V2
If in any doubt about details on this drawing call us on 0800 255 672	3rd Angle Projection	Finish	Page
		PPC	1 of 1