(Alideck - Junior Balcony Board With Tripple Bolt Channel & Optional Drainage Channel) - (Installation Guide)

A. Junior Balcony Board

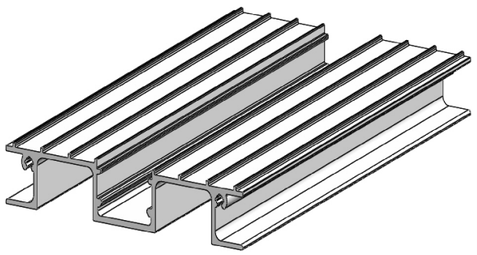

B. Junior Balcony Board Clip

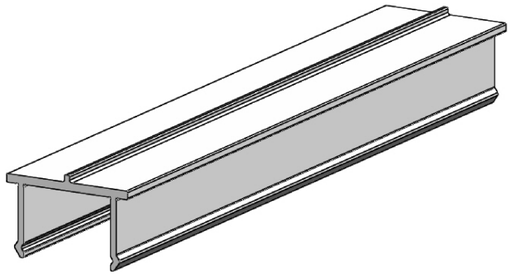

C. Junior Balcony Board Drainage Channel

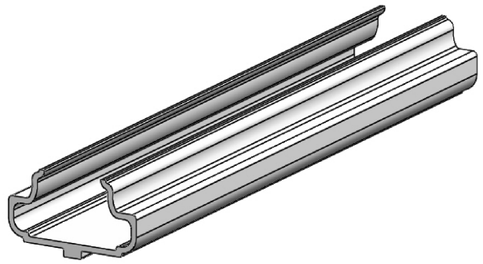

D. Tripple Bolt Channel

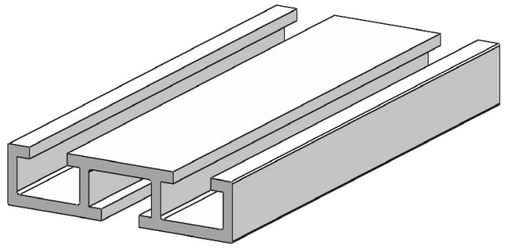

E. End Plate

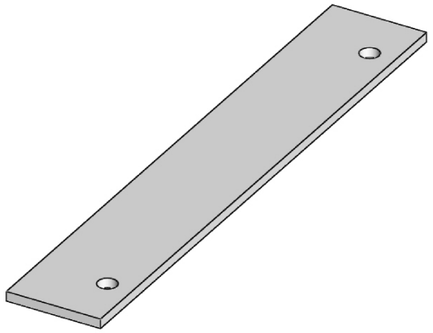

Notes.
Example Sections of Junior Balcony Board

Customer Sign Off.

Sign _____

Date_____

Record Of Revision Changes.
1. Creation of drawing (V1)

Colour; Any Standard RAL Colour

Delivery and Storage.
When components are delivered please ensure they are inspected and stored flat, also please ensure they are stored out of the sun. Do not store components upright.

Product Details:
Junior Balcony Board, Junior Balcony Board Clip, Junior Balcony Board Drainage Channel and Tripple Bolt Channel

ALIDECK
Aluminium Decking
From

This drawing and the product it displays is the sole property of The Milwood Group any reproduction of this drawing or product without the written permission of The Milwood Group is prohibited.

MILWOOD GROUP
Canopy, Carport and Veranda Systems

Drawing Title:
(Alideck - Junior Balcony Board With Tripple Bolt Channel & Optional Drainage Channel) - (Installation Guide)

Product:
Junior Balcony Board

Date	Page Size	Scale	Drawn
21-06-20	A3 (L)	DNS	Shyam
Issuer	**Sequence**	**(Tol)**	**Rev**
MIL	000001	+/- 1mm	V1
If In any doubt about details on this drawing call us on 01622 235 672	3rd Angle Projection	**Finish**	**Page**
		PPC	1 of 9

(Alideck - Junior Balcony Board With Tripple Bolt Channel & Optional Drainage Channel) - (Installation Guide)

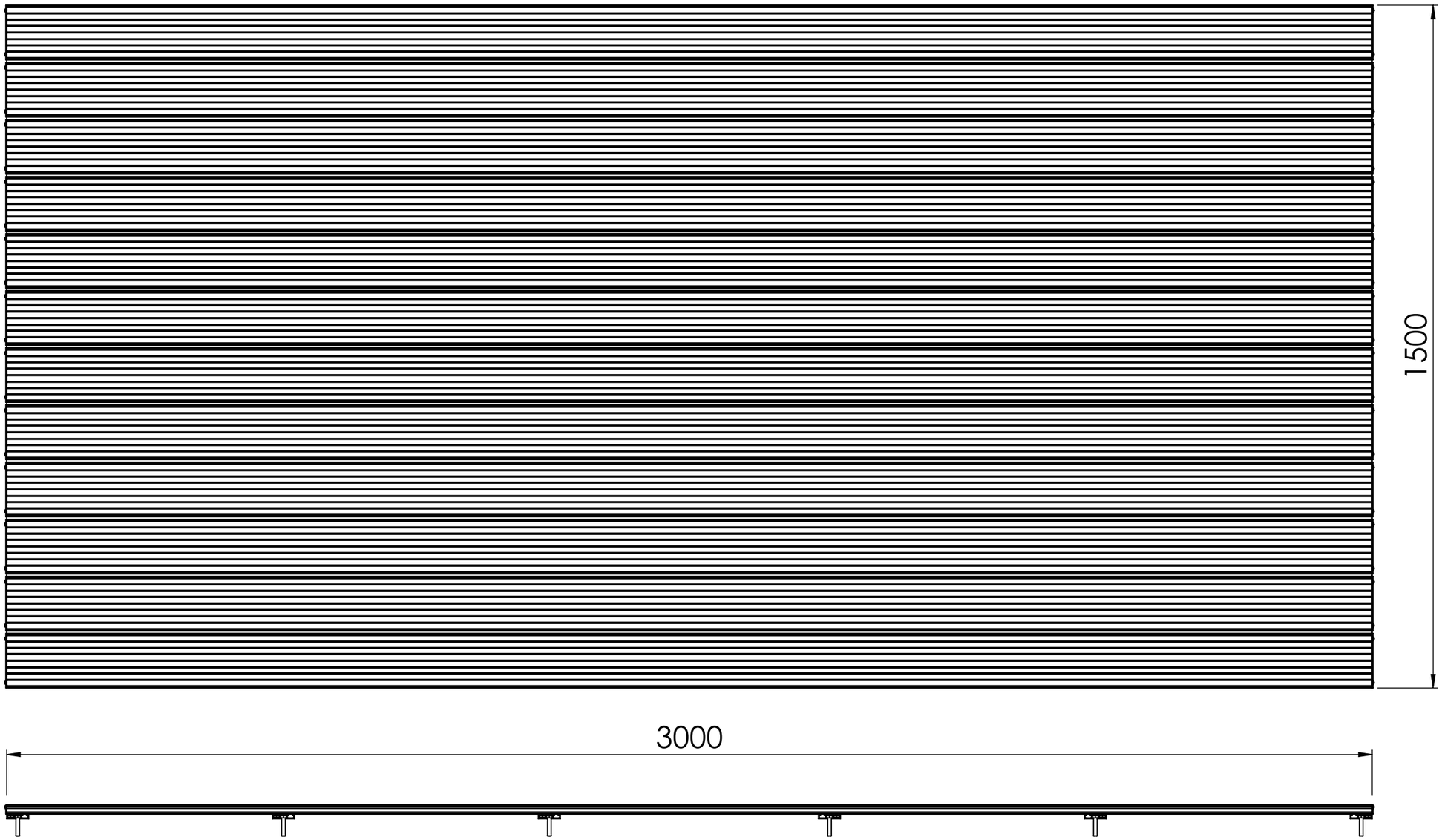

Important guidance notes for installation:

1. **When installing Junior Boards ensure a minimum of 3mm to a maximum of 8mm (we recommend 5mm) is allowed between each board for drainage. Gap will be 5mm if using the drainage channel.**
2. **When installing onto waterproofing, ensure adequate spreader plates or additional padding is added between the underside of the foot plate and the waterproofing. AliDeck cannot be held responsible for penetration or damage to existing waterproofing. If unsure of application please contact us.**
3. **Fix all boards within a maximum span requirements allowed, (upto 600mm on the Junior Board) do not exceed the span requirements for each type of board, please refer to the span tables on the website, contact us for further details if unsure.**
4. **When cutting boards to width, never cut a board less that the centre section of 30mm as the cover clip will not be able to be installed. Consider cutting the first and the last board if required to obtain the desired platform width.**
5. **Please ensure the decking is covered with a barrier (plywood or plastic material) once installed to prevent any third party debris, swarf or waste material from potentially damaging the surface finish.**
6. **If you are installing onto existing timber, please ensure you have a clear 150mm of air gap underneath the decking to ensure good airflow and to prevent heat build up.**
7. **Please ensure each bearer is level to the next bearer.**
8. **Fixings to use are M8 Stainless Steel Bolts, Nuts and Washers, 4mm No. 8 Stainless Steel Screws and Self-Drilling Screws if required.**

Notes.
Example Sections of Junior Balcony Board

Customer Sign Off.

Sign _____

Date_____

Record Of Revision Changes.
1. Creation of drawing (V1)

Colour; Any Standard RAL Colour

Delivery and Storage.
When components are delivered please ensure they are inspected and stored flat, also please ensure they are stored out of the sun. Do not store components upright.

Product Details:
Junior Balcony Board, Junior Balcony Board Clip, Junior Balcony Board Drainage Channel and Tripple Bolt Channel

ALIDECK
Aluminium Decking
From

This drawing and the product it displays is the sole property of The Milwood Group any reproduction of this drawing or product without the written permission of The Milwood Group is prohibited.

MILWOOD GROUP
Canopy, Carport and Veranda Systems

Drawing Title:
(Alideck - Junior Balcony Board With Tripple Bolt Channel & Optional Drainage Channel) - (Installation Guide)

Product:
Junior Balcony Board

Date	Page Size	Scale	Drawn
21-06-20	A3 (L)	DNS	Shyam
Issuer	**Sequence**	**(Tol)**	**Rev**
MIL	000001	+/- 1mm	V1
If In any doubt about details on this drawing call us on 01622 235 672	3rd Angle Projection	**Finish**	**Page**
		PPC	2 of 9

Step 1 : Lay the Channels in the position required (no more than 600mm apart)
Place the Triple Bolt Channel so the side with one bolt channel is facing downwards

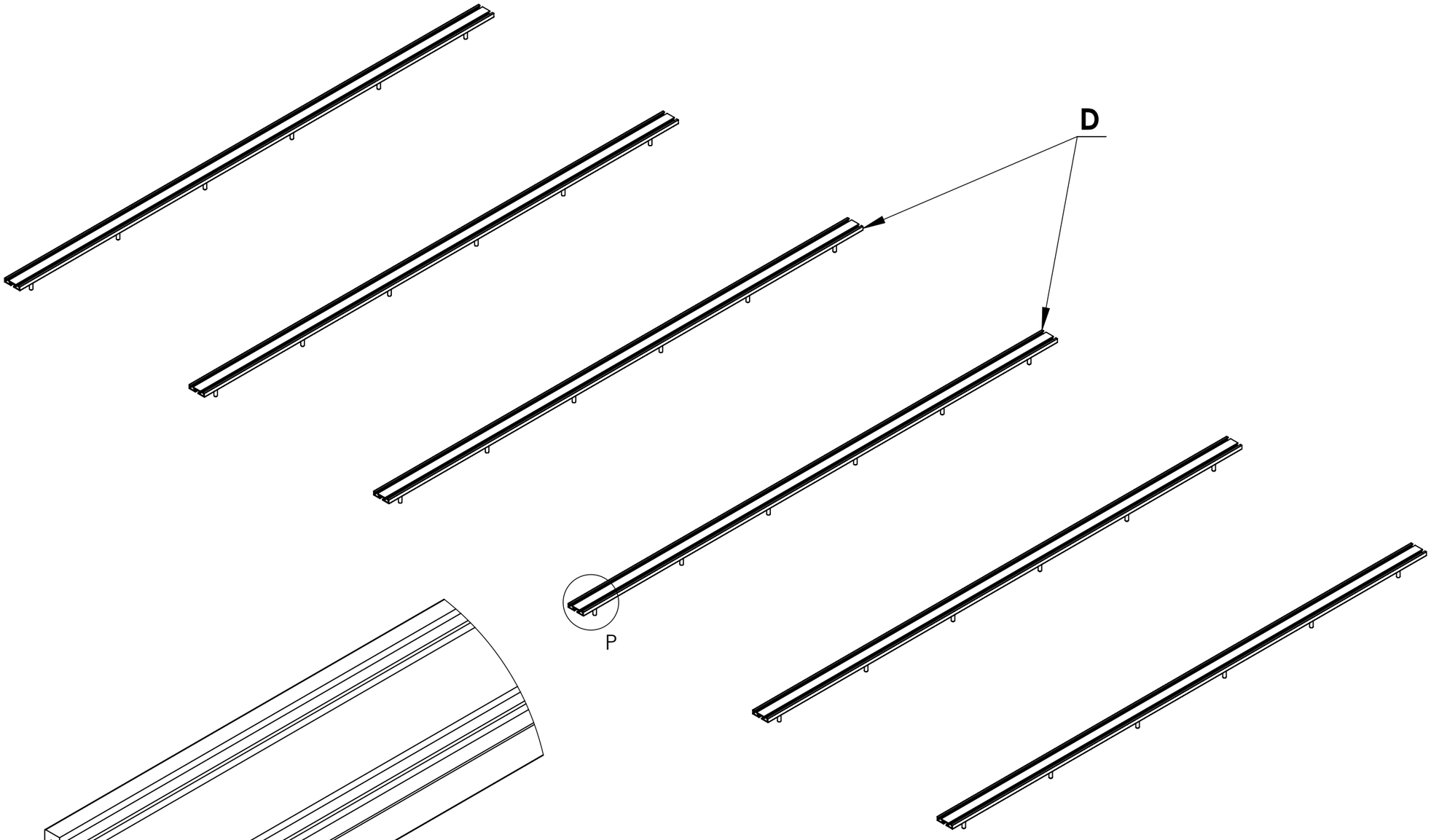

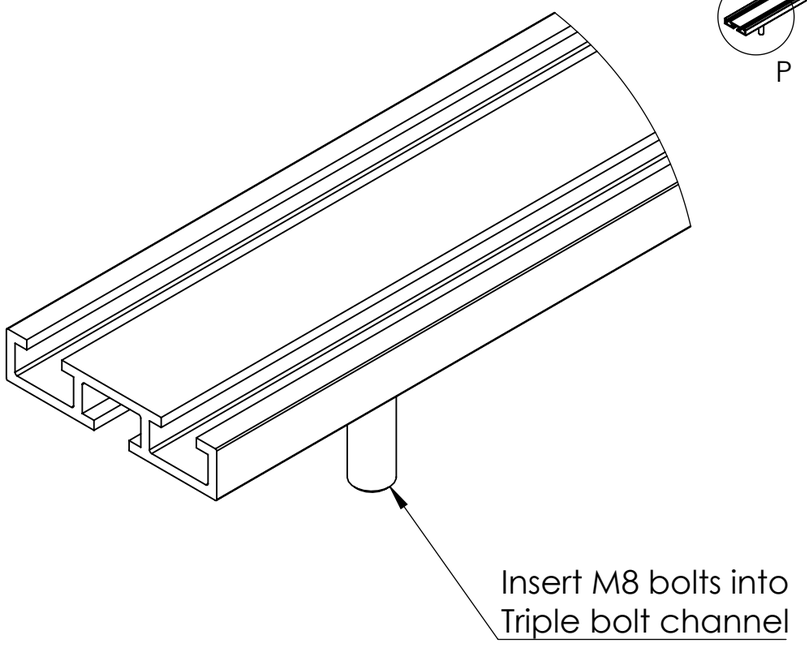

DETAIL P

Notes.
Example Sections of Junior Balcony Board

Customer Sign Off.

Sign _____

Date_____

Record Of Revision Changes.
1. Creation of drawing (V1)

Colour; Any Standard RAL Colour

Delivery and Storage.
When components are delivered please ensure they are inspected and stored flat, also please ensure they are stored out of the sun. Do not store components upright.

Product Details:
Junior Balcony Board, Junior Balcony Board Clip, Junior Balcony Board Drainage Channel and Tripple Bolt Channel

ALIDECK
Aluminium Decking
From

This drawing and the product it displays is the sole property of The Milwood Group any reproduction of this drawing or product without the written permission of The Milwood Group is prohibited.

MILWOOD GROUP
Canopy, Carport and Veranda Systems

Drawing Title:
(Alideck - Junior Balcony Board With Tripple Bolt Channel & Optional Drainage Channel) - (Installation Guide)

Product:
Junior Balcony Board

Date	Page Size	Scale	Drawn
21-06-20	A3 (L)	DNS	Shyam
Issuer	**Sequence**	**(Tol)**	**Rev**
MIL	000001	+/- 1mm	V1
If In any doubt about details on this drawing call us on 01622 235 672	3rd Angle Projection	**Finish**	**Page**
		PPC	3 of 9

Step 2 : Attach the first Board as shown. Use M8 Bolts, Nuts and Washers to fix Board to Channels.

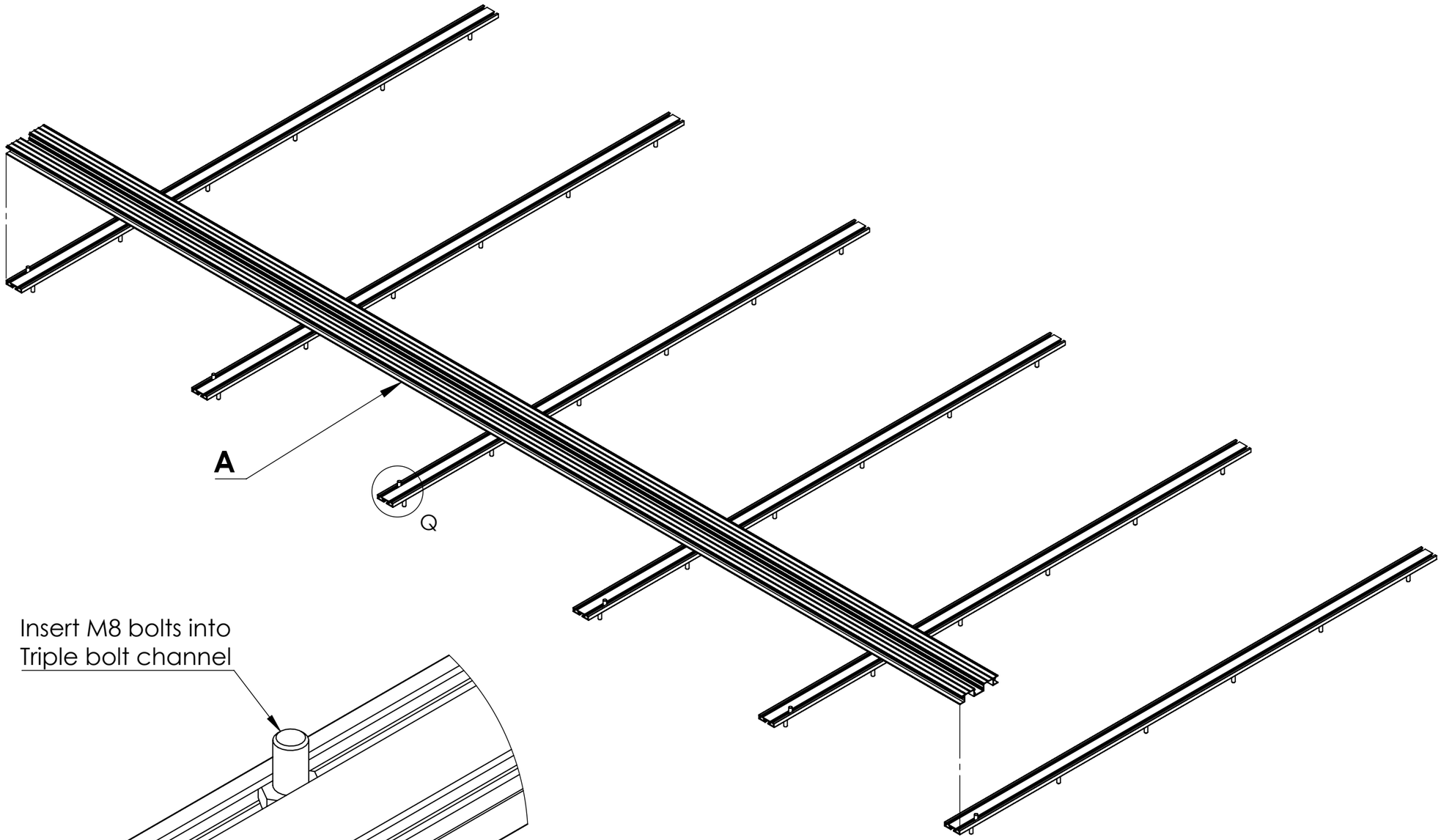

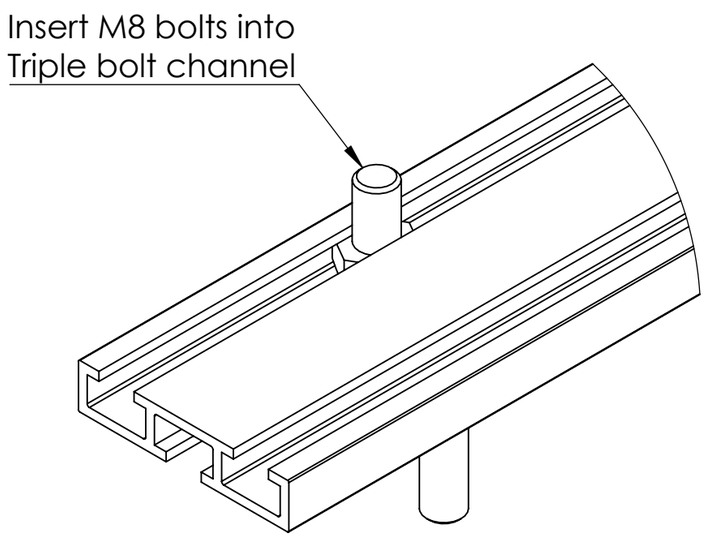

DETAIL Q

Notes.
Example Sections of Junior Balcony Board

Customer Sign Off.

Sign _____

Date_____

Record Of Revision Changes.
1. Creation of drawing (V1)

Colour; Any Standard RAL Colour

Delivery and Storage.
When components are delivered please ensure they are inspected and stored flat, also please ensure they are stored out of the sun. Do not store components upright.

Product Details:
Junior Balcony Board, Junior Balcony Board Clip, Junior Balcony Board Drainage Channel and Tripple Bolt Channel

ALIDECK
Aluminium Decking
From

This drawing and the product it displays is the sole property of The Milwood Group any reproduction of this drawing or product without the written permission of The Milwood Group is prohibited.

MILWOOD GROUP
Canopy, Carport and Veranda Systems

Drawing Title:
(Alideck - Junior Balcony Board With Tripple Bolt Channel & Optional Drainage Channel) - (Installation Guide)

Product:
Junior Balcony Board

Date	Page Size	Scale	Drawn
21-06-20	A3 (L)	DNS	Shyam
Issuer	**Sequence**	**(Tol)**	**Rev**
MIL	000001	+/- 1mm	V1
If In any doubt about details on this drawing call us on 01622 235 672	3rd Angle Projection	**Finish**	**Page**
		PPC	4 of 9

Step 3 : Attach the first Board Clip to the first Board as shown

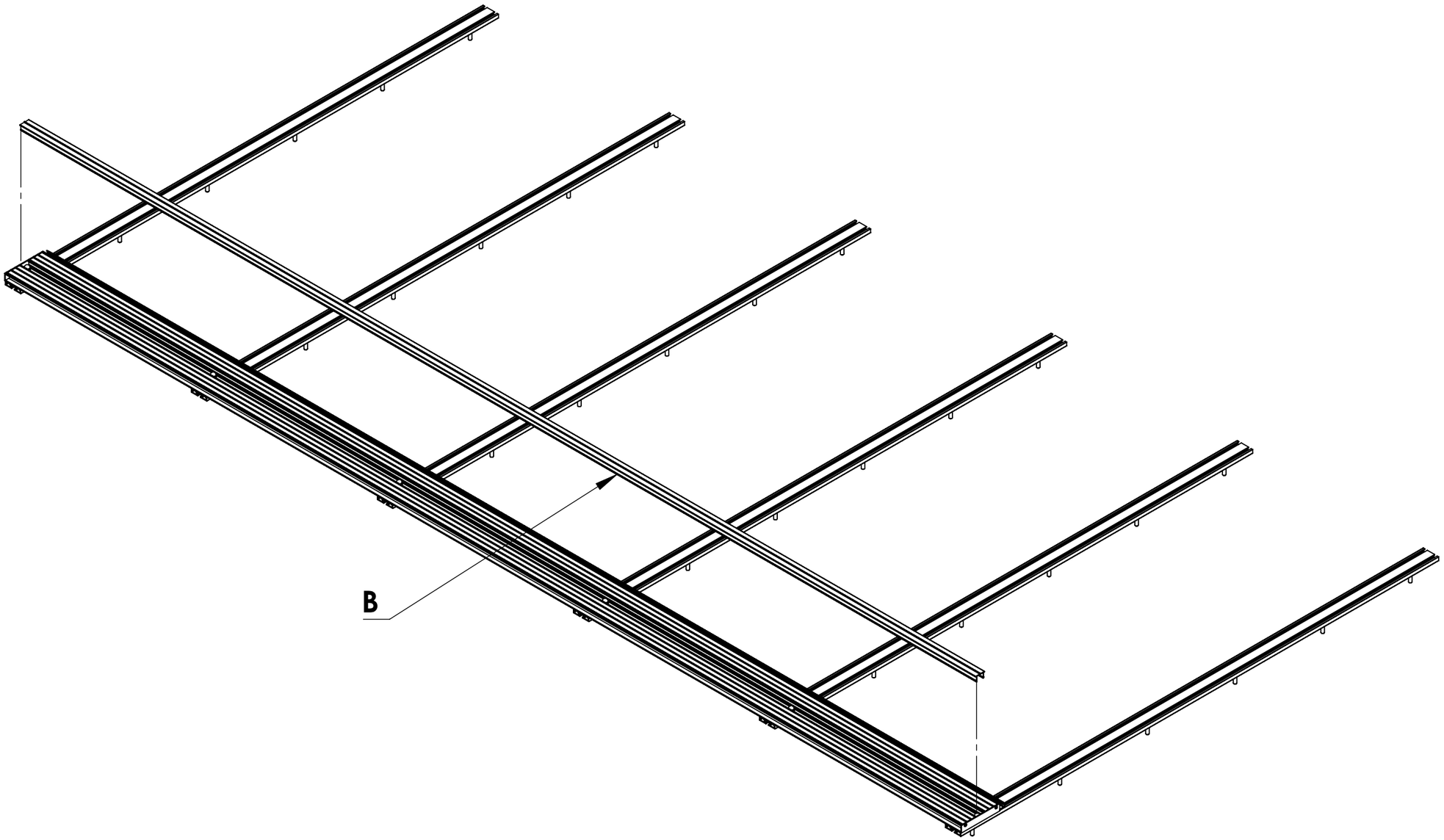

Notes.
Example Sections of Junior Balcony Board

Customer Sign Off.

Sign _____

Date_____

Record Of Revision Changes.
1. Creation of drawing (V1)

Colour; Any Standard RAL Colour

Delivery and Storage.
When components are delivered please ensure they are inspected and stored flat, also please ensure they are stored out of the sun. Do not store components upright.

Product Details:
Junior Balcony Board, Junior Balcony Board Clip, Junior Balcony Board Drainage Channel and Tripple Bolt Channel

ALIDECK
Aluminium Decking
From

This drawing and the product it displays is the sole property of The Milwood Group any reproduction of this drawing or product without the written permission of The Milwood Group is prohibited.

MILWOOD GROUP
Canopy, Carport and Veranda Systems

Drawing Title:
(Alideck - Junior Balcony Board With Tripple Bolt Channel & Optional Drainage Channel) - (Installation Guide)

Product:
Junior Balcony Board

Date	Page Size	Scale	Drawn
21-06-20	A3 (L)	DNS	Shyam
Issuer	**Sequence**	**(Tol)**	**Rev**
MIL	000001	+/- 1mm	V1
If In any doubt about details on this drawing call us on 01622 235 672	3rd Angle Projection	**Finish**	**Page**
		PPC	5 of 9

Step 4 : Attach the first Optional Drainage Channel to the first Board as shown

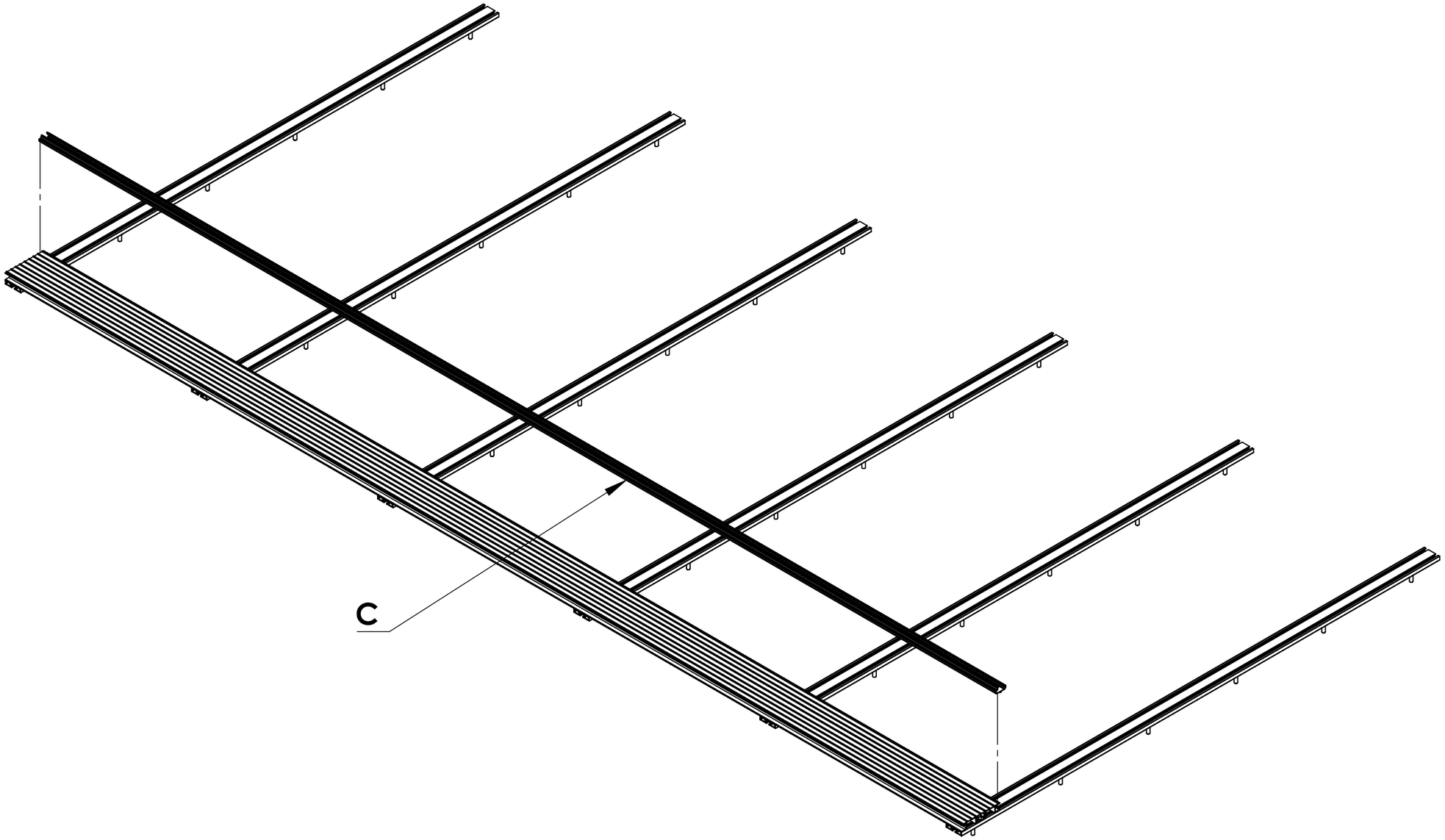

Notes.
Example Sections of Junior Balcony Board

Customer Sign Off.

Sign _____

Date_____

Record Of Revision Changes.
1. Creation of drawing (V1)

Colour; Any Standard RAL Colour

Delivery and Storage.
When components are delivered please ensure they are inspected and stored flat, also please ensure they are stored out of the sun. Do not store components upright.

Product Details:
Junior Balcony Board, Junior Balcony Board Clip, Junior Balcony Board Drainage Channel and Tripple Bolt Channel

ALIDECK
Aluminium Decking
From

This drawing and the product it displays is the sole property of The Milwood Group any reproduction of this drawing or product without the written permission of The Milwood Group is prohibited.

MILWOOD GROUP
Canopy, Carport and Veranda Systems

Drawing Title:
(Alideck - Junior Balcony Board With Tripple Bolt Channel & Optional Drainage Channel) - (Installation Guide)

Product:
Junior Balcony Board

Date	Page Size	Scale	Drawn
21-06-20	A3 (L)	DNS	Shyam
Issuer	**Sequence**	**(Tol)**	**Rev**
MIL	000001	+/- 1mm	V1
If In any doubt about details on this drawing call us on 01622 235 672	3rd Angle Projection	**Finish**	**Page**
		PPC	6 of 9

Step 5 : Attach the rest of the Boards, Board Clips and Optional Drainage Channels

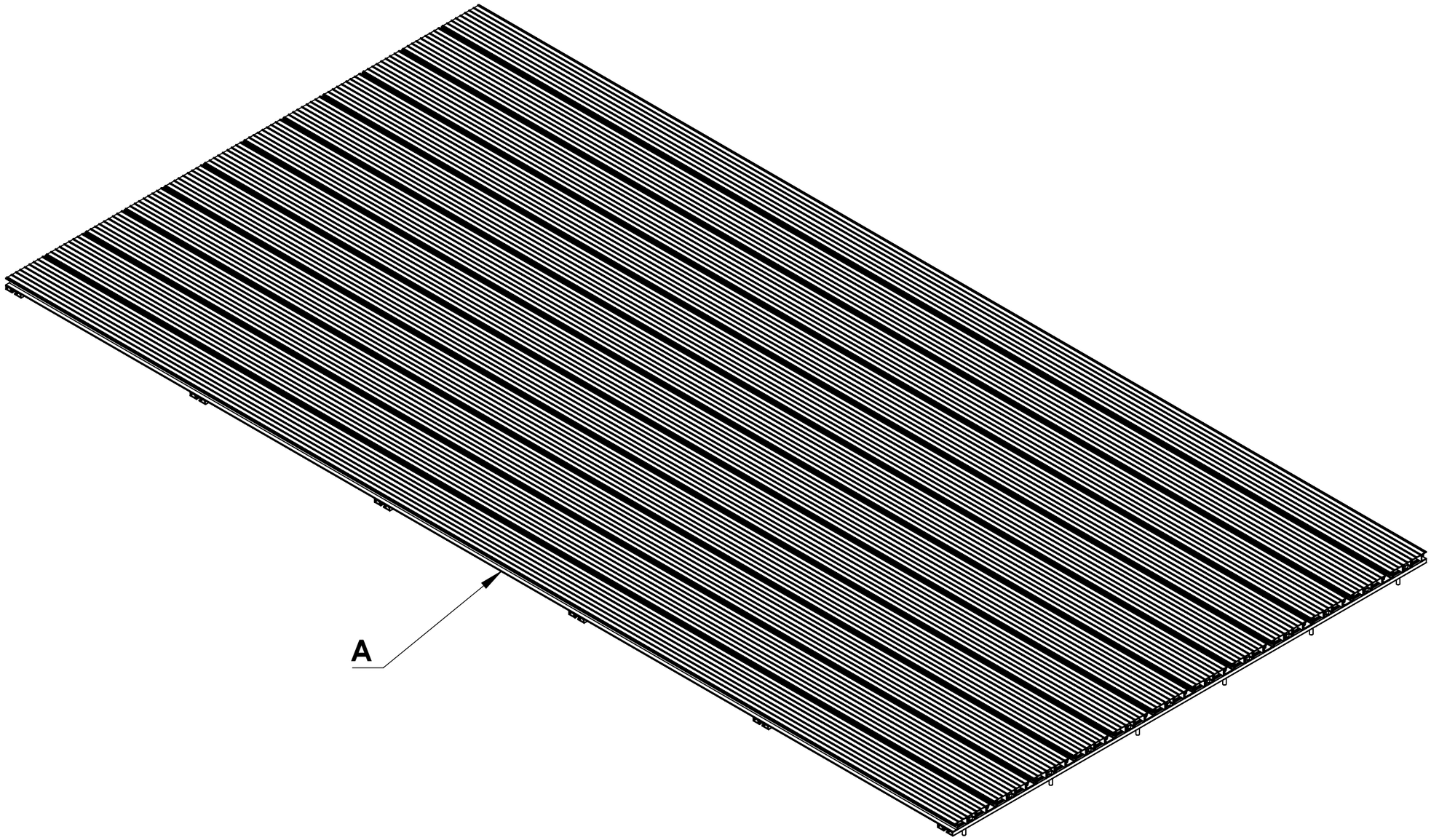

Notes.
Example Sections of Junior Balcony Board

Customer Sign Off.

Sign _____

Date_____

Record Of Revision Changes.
1. Creation of drawing (V1)

Colour; Any Standard RAL Colour

Delivery and Storage.
When components are delivered please ensure they are inspected and stored flat, also please ensure they are stored out of the sun. Do not store components upright.

Product Details:
Junior Balcony Board, Junior Balcony Board Clip, Junior Balcony Board Drainage Channel and Tripple Bolt Channel

ALIDECK
Aluminium Decking
From

This drawing and the product it displays is the sole property of The Milwood Group any reproduction of this drawing or product without the written permission of The Milwood Group is prohibited.

MILWOOD GROUP
Canopy, Carport and Veranda Systems

Drawing Title:
(Alideck - Junior Balcony Board With Tripple Bolt Channel & Optional Drainage Channel) - (Installation Guide)

Product:
Junior Balcony Board

Date	Page Size	Scale	Drawn
21-06-20	A3 (L)	DNS	Shyam
Issuer	**Sequence**	**(Tol)**	**Rev**
MIL	000001	+/- 1mm	V1
If In any doubt about details on this drawing call us on 01622 235 672	3rd Angle Projection	**Finish**	**Page**
		PPC	7 of 9

Step 6 : Now attach the End Plates using 4mm no. 8 Stainless Steel Screw if required

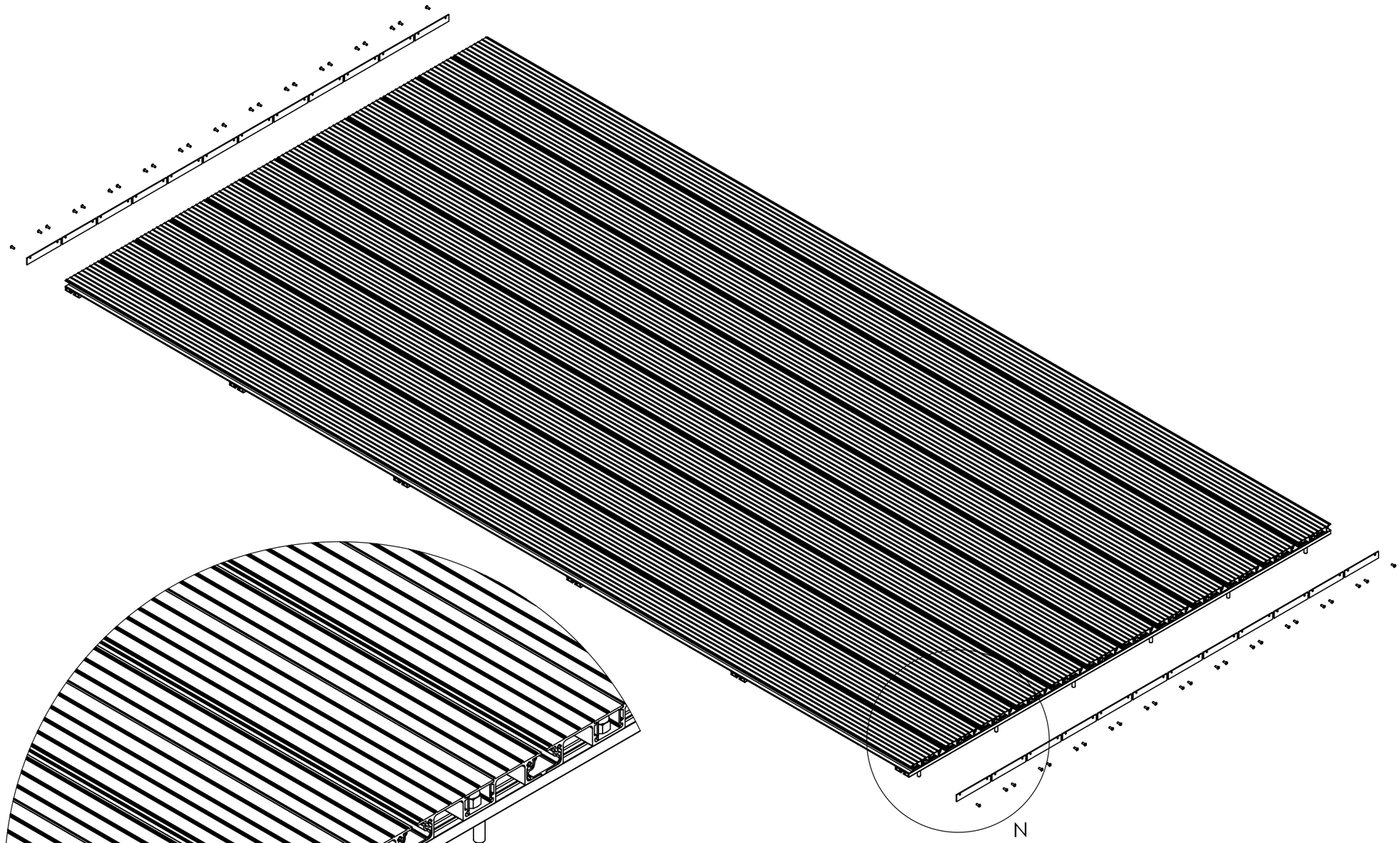

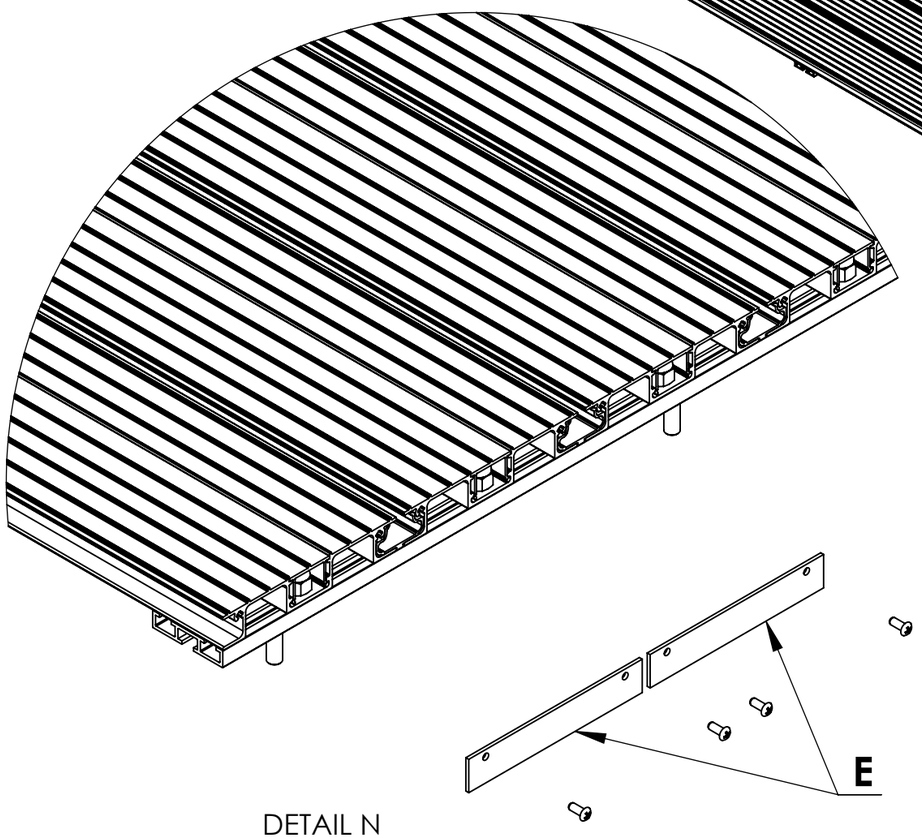

DETAIL N

Notes.
Example Sections of Junior Balcony Board

Customer Sign Off.

Sign _____

Date_____

Record Of Revision Changes.
1. Creation of drawing (V1)

Colour; Any Standard RAL Colour

Delivery and Storage.
When components are delivered please ensure they are inspected and stored flat, also please ensure they are stored out of the sun. Do not store components upright.

Product Details:
Junior Balcony Board, Junior Balcony Board Clip, Junior Balcony Board Drainage Channel and Tripple Bolt Channel

ALIDECK
Aluminium Decking
From

This drawing and the product it displays is the sole property of The Milwood Group any reproduction of this drawing or product without the written permission of The Milwood Group is prohibited.

MILWOOD GROUP
Canopy, Carport and Veranda Systems

Drawing Title:
(Alideck - Junior Balcony Board With Tripple Bolt Channel & Optional Drainage Channel) - (Installation Guide)

Product:
Junior Balcony Board

Date	Page Size	Scale	Drawn
21-06-20	A3 (L)	DNS	Shyam
Issuer	**Sequence**	**(Tol)**	**Rev**
MIL	000001	+/- 1mm	V1
If In any doubt about details on this drawing call us on 01622 235 672	3rd Angle Projection	**Finish**	**Page**
		PPC	8 of 9

(Alideck - Junior Balcony Board With Tripple Bolt Channel & Optional Drainage Channel) - (Installation Guide)

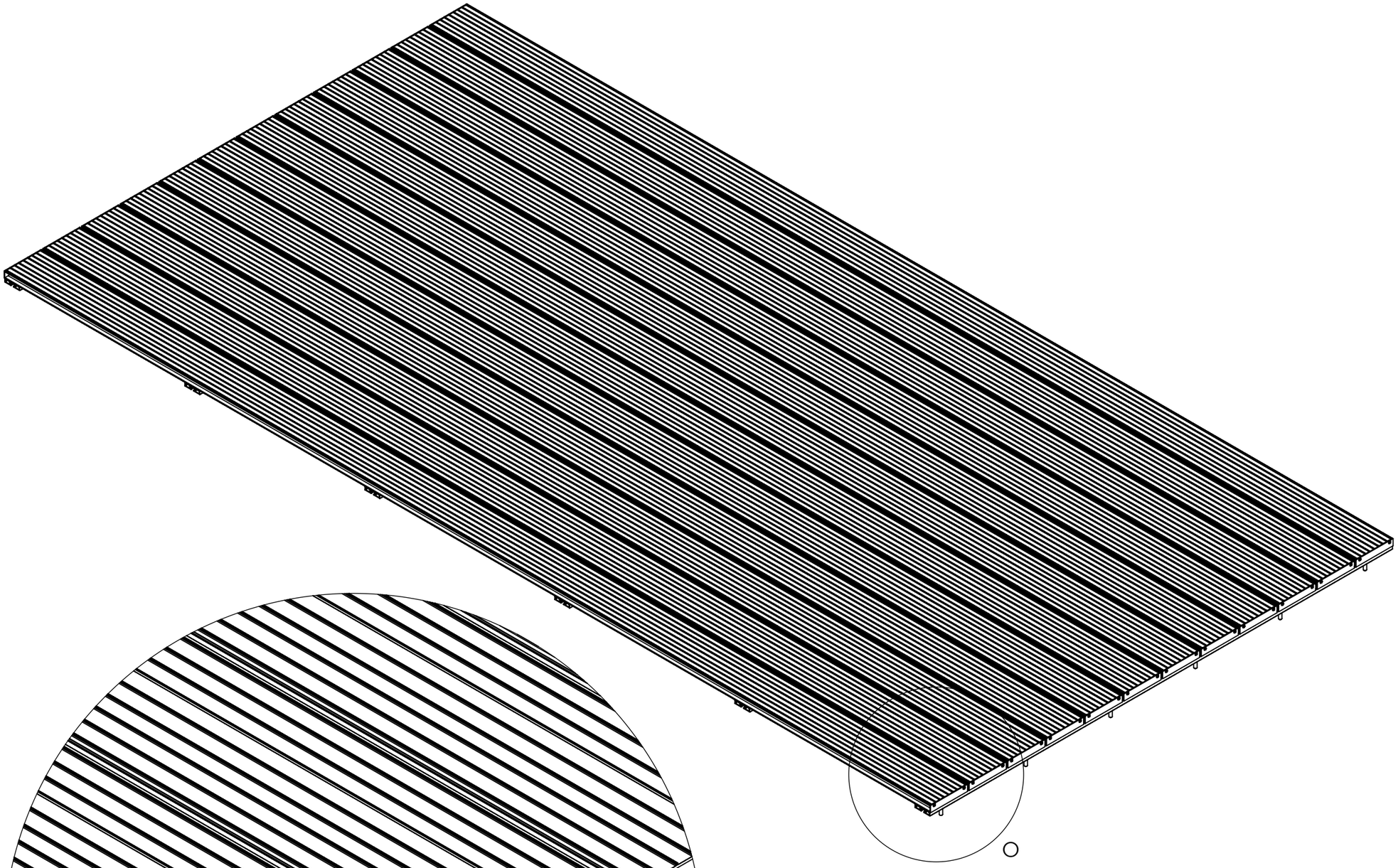

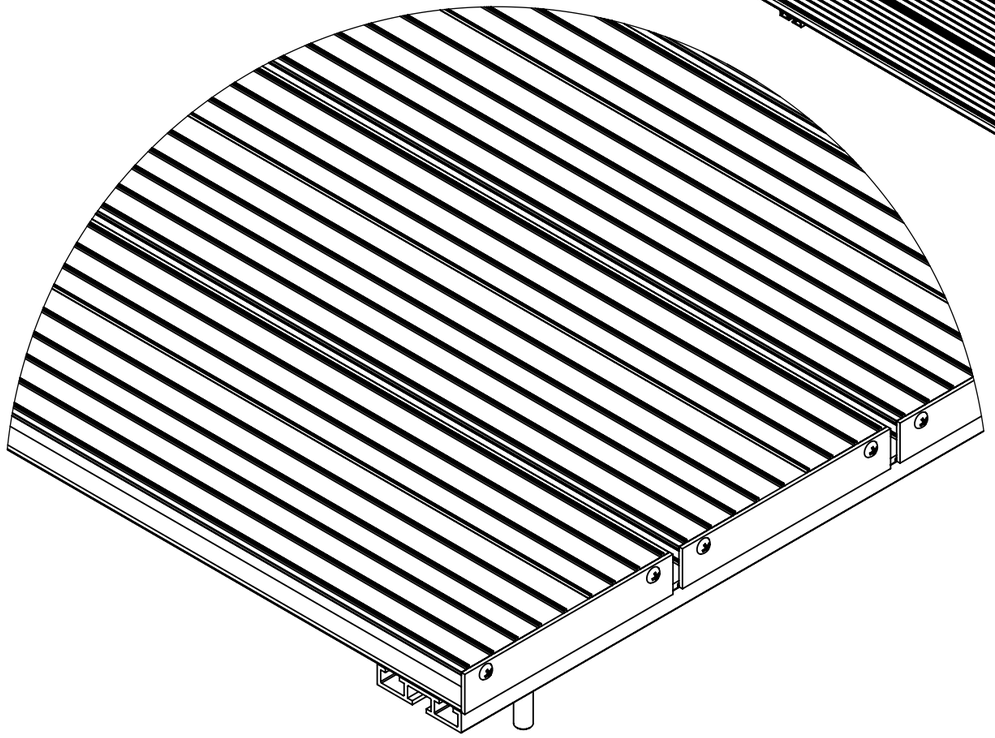

DETAIL O

Notes.
Example Sections of Junior Balcony Board

Customer Sign Off.

Sign _____

Date_____

Record Of Revision Changes.
1. Creation of drawing (V1)

Colour; Any Standard RAL Colour

Delivery and Storage.
When components are delivered please ensure they are inspected and stored flat, also please ensure they are stored out of the sun. Do not store components upright.

Product Details:
Junior Balcony Board, Junior Balcony Board Clip, Junior Balcony Board Drainage Channel and Tripple Bolt Channel

ALIDECK
Aluminium Decking
From

This drawing and the product it displays is the sole property of The Milwood Group any reproduction of this drawing or product without the written permission of The Milwood Group is prohibited.

MILWOOD GROUP
Canopy, Carport and Veranda Systems

Drawing Title:
(Alideck - Junior Balcony Board With Tripple Bolt Channel & Optional Drainage Channel) - (Installation Guide)

Product:
Junior Balcony Board

Date	Page Size	Scale	Drawn
21-06-20	A3 (L)	DNS	Shyam
Issuer	**Sequence**	**(Tol)**	**Rev**
MIL	000001	+/- 1mm	V1
If In any doubt about details on this drawing call us on 01622 235 672	3rd Angle Projection	**Finish**	**Page**
		PPC	9 of 9